Table of Contents

ISBE Board 2
Functional Description 2
Application Data 4

Mr. Lucian
Sales manager

Joyoung International Trading Co., Ltd
Whatsapp/Wechat: +86 18106906650
Email: Lily@htechplc.com
Mobile: +86 18106906650
Website: www.xm-dcs.com
Address: Room 1503, Building B, Diamond Coast,
No. 96 Lujiang Road, Siming District, Xiamen Fujian

Wechat

ISBE Board

The IS200ISBE ISBus Extender Board (ISBE) is connected between an ISBus full duplex source (either a BAIA or an ACL module) and the ISBus. It provides a fiber-optic to electrical conversion of the RS-485 signals and the capability to bypass a node of the ISBus when either power to the node is interrupted or an interlock connection within the full duplex interface is opened. See Figure 5-3 for a block diagram.

Functional Description

A bypass relay is part of the ISBE board. It connects the transmit signals from either the full duplex input (P1A) or the AUX XMIT DATA IN (P1B) to the fiber optic transmit output data (P2). This is done through the transmit electrical-to-optical conversion and the optical receive-data-input connector (P3) of the ISBus, to the full duplex connector through the receive optical-to-electrical converter when 24 V dc is available (on either P1A or TB2) and the interlock connection on P1A or JP1 is closed.

If the 24 V dc is not supplied to the ISBE board the following occurs:

- The transmit connection between P1 and P2 is interrupted (broken).
- The receive connection between P3 and P1 is interrupted (broken).
- The connection between the receive input (P3) and the transmit output (P2) is made such that receive optical input data are converted to electrical signals, optionally retimed and reconverted to an optical output signal.

The dc-dc converter is capable of accepting an input voltage of 18 to 36 V and has a maximum input power requirement of 5 watts.

Optical Performance

The optical inputs and outputs are compatible with 200µm Hard Clad Silica (HCS) fiber or 62.5/125 µm glass fiber and the input/output connectors are ST types. The optical performance meets that of a transmitter/receiver pair that provides at least 1 km link when used with either an HCS fiber optic cable or a 62.5/125µm glass fiber.

Transmit Signal Conditioning

Transmit signal conditioning consists of input signal isolation and termination, bypass multiplexing, and electrical-to-optical signal conversion. Signal isolation is greater than 1 Megohm at 500 V rms for one second to any other terminal. The input termination is 100 (±10) ohms.

The bypass multiplexing provides connectivity as follows: (see Figure 5-3)

- From the transmit data input (electrical) to the transmit data output (optical) when the node is not being bypassed
- From the receive data input (optical) to the transmit data output (optical) when the node is being bypassed

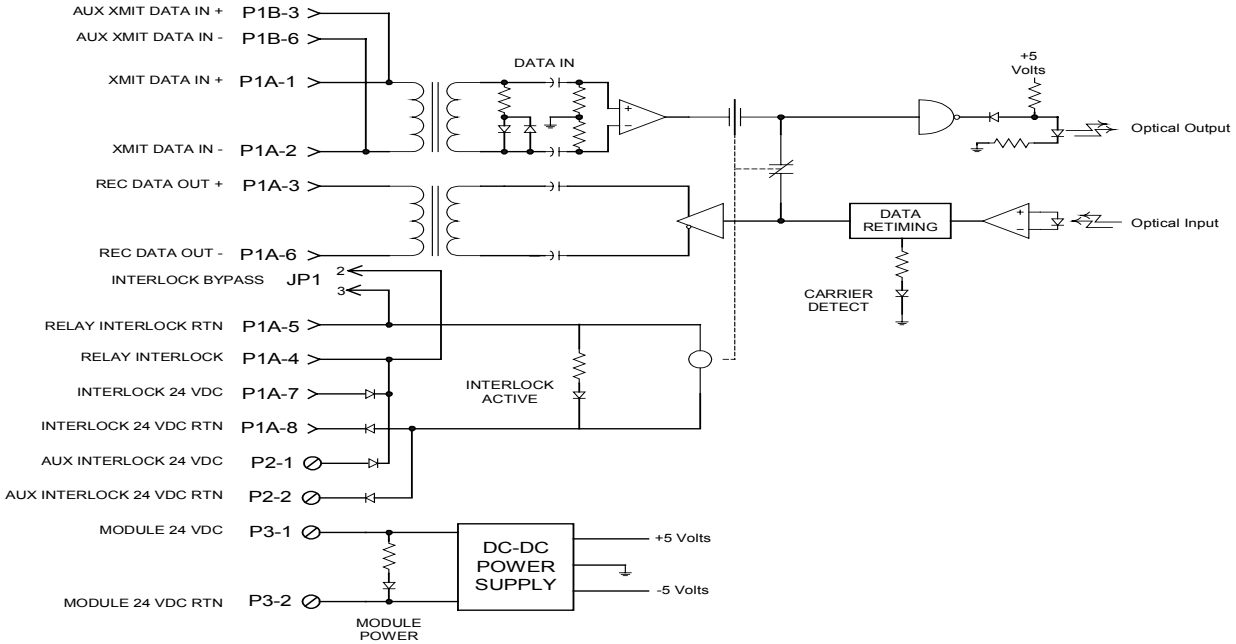

Fiber Optic Module which can be used as:

1 - Repeater

a - keep the relay de-energized: do not jumper P1A-4,5
do not place jumper between JP1-2,3

b - supply power to the module: apply 24 Volts between P3-1,2

c - use only the fiber optic I/O

2 - Optical-to-Electrical Converter

a - Optical-In/Electrical-Out uses the Optical input and Pair #2 DATA OUT (P1A-3,6)

b - Optical-Out/Electrical-In uses the AUX DATA INPUT (P1B-3,6) and Optical output

c - Relay must be energized: apply 24 Volts between JP1-2,3

d - supply power to the module: apply 24 Volts between P2-1,2

3 - Standard I/O (Backplane or ACL connection)

a - connect Backplane or ACL to P1

b - provide power for the relay: Backplane interface uses 24 VDC from HFPA via P1-7,8
ACL interface uses 24 VDC from HFPA via P2-1,2

c - provide the interlock for the relay: jumper P1A-4,5 on the Backplane or ACL

d - supply power to the module: apply 24 Volts between P3-1,2

Figure 5-3. ISBE Board Block Diagram

Receive Signal Conditioning

Receive signal conditioning provides output signal isolation, bypass multiplexing, and optical-to-electrical signal conversion. Signal isolation is greater than 1 Megohm at 500 V rms for one second. The receiver circuitry is capable of driving a transformer-coupled output load with a 100 ohm (±10%) resistive termination and still meeting the RS-485 specifications. The receiver output does not present any differential dc levels on its output.

The bypass multiplexing provides connectivity as follows: (see Figure 5-3)

- From the receive data input (optical) to the receive data output (electrical) when the node is not being bypassed
- From the receive data input (optical) to the transmit data output (optical) when the node is being bypassed

Application Data

The ISBE board is DIN-rail mounted with the mounting feet serving as the connection point for any chassis ground. It includes six connectors, one terminal board, one adjustable jumper, and four LED indicators. There are no fuses or testpoints on the board. See Figure 5-4 for component locations.

LED Indicators

There are four LED indicators on the ISBE board that indicate the following:

- A Green LED (DS1), POWER, indicates that 24 V dc is available for powering the module.
- A Yellow LED (DS2), XMIT DATA IN indicates the presence of transmit data input (from P1).
- A Green LED (DS3), INTERLOCK ACTIVE, indicates that there is power to the bypass relay.
- A Green LED (DS4), DETECT, indicates that there is correct optical date being received.

Connectors

The ISBE board has five plug connectors, one terminal board, and two fiber-optic connectors. See the following tables for descriptions:

Table	Connector	Description
5-6	P1A	RJ45 shielded full duplex connector
5-7	P1B	RJ45 shielded auxiliary transmit data connector
5-8	P2	Auxiliary interlock power connector (screw terminals)
5-9	P3	Board electronics power connector (screw terminals)
5-10	U5 & U9	ISBus fiber-optic connectors

Adjustable Hardware

The ISBE board includes one adjustable jumper, JP1. See Table 5-11 for jumper setting description.

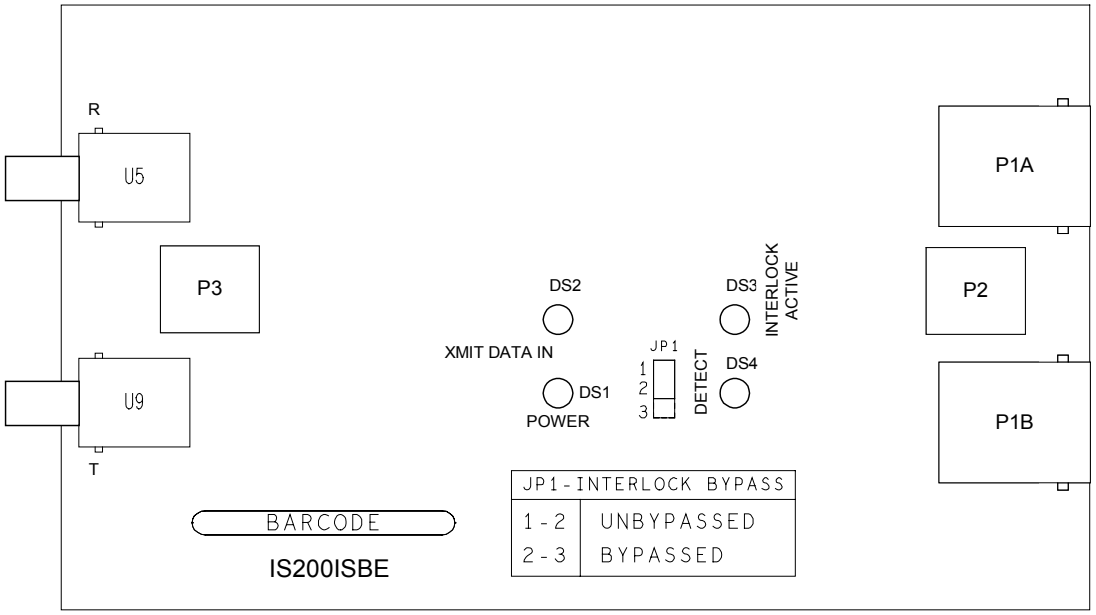

Figure 5-4. ISBE Board Layout Diagram

Table 5-6. ISBE P1A Full Duplex Connector

Pin No.	Nomenclature	Description
1	XMIT DATA IN+	Positive RS-422 input
2	XMIT DATA IN–	Negative RS-422 input
3	RECV DATA OUT+	Positive RS-422 output
4	RELAY INTERLOCK	Routing of the 24 V dc to the full duplex source
5	RELAY INTERLOCK RTN	Routing of the 24 V dc back from the full duplex source to energize the relay(s)
6	RECV DATA OUT–	Negative RS-422 output
7	INTERLOCK 24VDC	24 V dc input
8	INTERLOCK 24VDC RTN	24 V dc return

*Table 5-7. ISBE P1B Auxiliary Transmit Connector**

Pin No.	Nomenclature	Description
1, 2	N/C	No Connection
3	XMIT DATA IN+	Positive RS-485 input
4, 5	N/C	No Connection
6	XMIT DATA IN–	Negative RS-485 input
7, 8	N/C	No Connection

*For applications that use the board for only fiber-optic to electrical conversion and do not use P1A.

Table 5-8. ISBE P2 Auxiliary Interlock Power Connector

Pin No.	Nomenclature	Description
1	AUX INTERLOCK 24VDC	24 V dc from an auxiliary/external power source
2	AUX INTERLOCK 24VDC RTN	24 V dc return from an auxiliary/external power source

Table 5-9. ISBE P3 Board Electronics Power Connector

Pin No.	Nomenclature	Description
1	24VDC MODULE POWER	24 V dc power to the active components on the board*
2	24VDC MODULE POWER RTN	24 V dc return

*This power should come from an independent power supply to maintain power to the board in case the power to the cabinet is removed.

Table 5-10. Fiber-Optic Connectors (Type ST)

Connector	Description
U5	Receive data interface to ISBus
U9	Transmit data interface to ISBus

Table 5-11. ISBE JP1 Interlock Bypass Jumper

Position	Description
1-2	Default position; board must have the external interlock closed to energize the relay(s)
2-3	Shorts out the interlock; power will have to supplied to the board through P1-7, 8 or TB2-1, 2 to energize the relay(s)