ISBB Board

The IS200ISBB ISBus Bypass Board (ISBB) is connected between an ISBus full duplex source (either a BAIA or an ACL_ module) and the ISBus. It provides the capability to bypass a node of the ISBus when either power to the node is interrupted or an interlock connection within the full duplex interface is opened. See Figure 5-1 for a block diagram.

Functional Description

A bypass relay is part of the ISBB board. It connects the transmit signals from the full duplex input (P1) to the transmit output data (P2) and receive data input connectors (P3) of the ISBus when 24 V dc is available (from P1 or P4) and the interlock connection on P1 is closed.

If the 24 V dc is not supplied to the ISBB board the following occurs:

- The transmit connection between P1 and P2 is interrupted (broken).
- The receive connection between P3 and P1 is interrupted (broken).
- The connection between the receive input (P3) and the transmit output (P2) is made such that RECV DATA IN+ connects to XMIT DATA OUT+ and RECV DATA IN− connects to XMIT DATA OUT−.

There are two LED indicators on the ISBB board that indicate transmit data input and bypass relay power.

Bypass Relay

The bypass relay coil pick-up voltage is greater than 14.5 V. The dropout voltage is 11.0 ±1.0 V dc during a brown-out condition when the 24 V input is decreasing toward zero. The dropout voltage in normal operation is less than 10 V. Normal operation is when the voltage at the relay interlock input is decreasing toward zero while the voltage at the input (P1-7, P1-8) remains at 24 V dc.

The bypass relay input voltage is a nominal 24 V dc with a maximum of 30 V dc. The voltage comes into the ISBB board on either the full duplex connector P1 or the auxiliary interlock power TB2 through the interlock on the full duplex connector.

- P1-7 is positive and P1-8 is the return.
- TB2-1 is positive and TB2-2 is negative.

Neither side of the input voltage is referenced to any other voltage or return on the board. The relay operates during slowly varying voltages, such as during a brown-out when the voltage slowly decreases to zero. The contact current rating is greater than 200 mA @ 10 V rms and isolation is at least 40 dB at 1 MHz. The receiver output terminals are terminated with 100 ohm resistors. The maximum operating power for one or multiple relays is less than 1 W.

Mr. Lucian
Sales manager
Joyoung International Trading Co., Ltd
Whatsapp/Wechat: +86 18106906650
Email: Lily@htechplc.com
Mobile: +86 18106906650
Website: www.xm-dcs.com
Address: Room 1503, Building B, Diamond Coast,
No. 96 Lujiang Road, Siming District, Xiamen Fujian
Wechat

Signal Conditioning

The only transmit and receive signal conditioning is the interruption and rerouting of the signals via the bypass relay, as shown in Figure 8-1. Input signal isolation is greater than 1 megohm at 500 V rms for 1 second.

Input termination is not done on the ISBB board. The receiver circuitry is capable of driving a transformer-coupled output load with a 100 ohm (±10%) resistive termination on its secondary. The receiver output does not present any differential dc levels on its output.

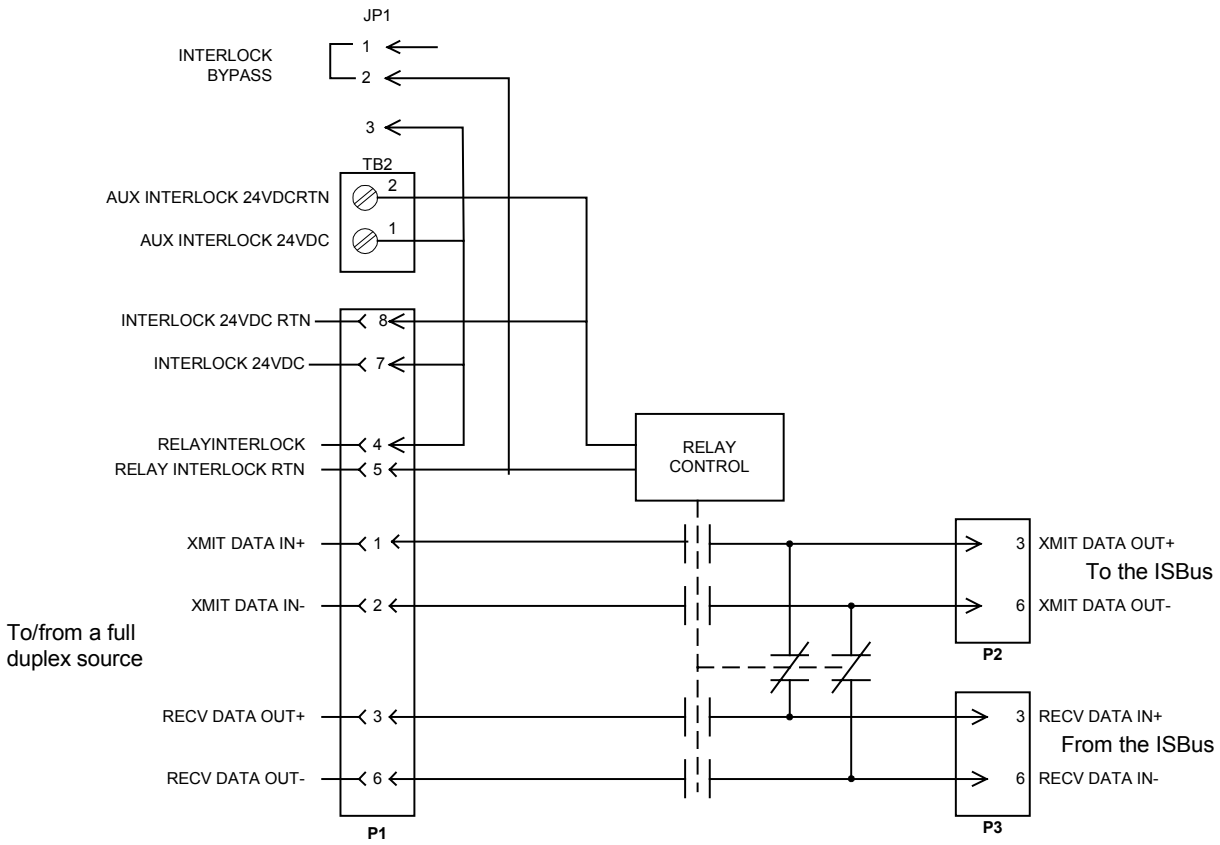

Figure 5-1. ISBB Board Block Diagram

Application Data

The ISSB board is DIN-rail mounted with the mounting feet serving as the connection point for any chassis ground. It includes three connectors, one terminal board, one Berg jumper, and two LED indicators. There are no fuses or testpoints on the board. See Figure 5-2 for component locations.

LED Indicators

There are two LED indicators on the ISBB board.

- A Yellow LED (DS1), XMIT DATA IN, lights to indicate the presence of transmit data input (from P1).
- A Green LED (DS2), INTERLOCK ACTIVE, lights to indicate that there is power to the bypass relay.

Connectors

The ISBB board includes three plug connectors and one terminal block. See the following tables for descriptions:

Table	Connector	Description
5-1	P1	Full duplex connector
5-2	P2	Transmit data connector
5-3	P3	Receive data connector
5-4	TB2	Auxiliary interlock power terminal board

Adjustable Hardware

The ISBB board includes one Berg jumper, JP1. See Table 5-5 for jumper setting description.

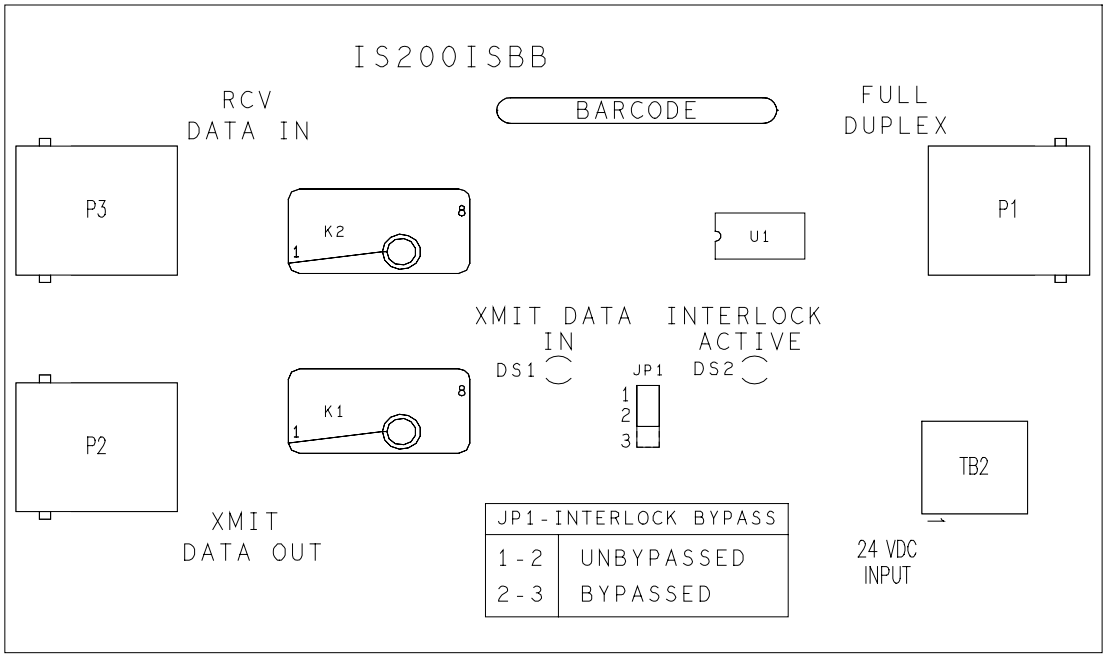

Figure 5-2. ISBB Board Layout Diagram

Table 5-1. ISBB P1 Full Duplex Connector

Pin No.	Nomenclature	Description
1	XMIT DATA IN+	Positive RS-422 input
2	XMIT DATA IN–	Negative RS-422 input
3	RECV DATA OUT+	Positive RS-422 output
4	RELAY INTERLOCK	Routing of the 24 V dc to the full duplex source
5	RELAY INTERLOCK RTN	Routing of the 24 V dc back from the full duplex source to energize the relay(s)
6	RECV DATA OUT–	Negative RS-422 output
7	INTERLOCK 24VDC	24 V dc input
8	INTERLOCK 24VDC RTN	24 V dc return input

Table 5-2. ISBB P2 Transmit Data Connector

Pin No.	Nomenclature	Description
1, 2	NC	Not Connected
3	XMIT DATA OUT+	Transmitter positive output to the ISBus (+)
4, 5	NC	Not Connected
6	XMIT DATA OUT–	Transmitter negative output to the ISBus (–)
7, 8	NC	Not Connected

Table 5-3. ISBB P3 Receive Data Connector

Pin No.	Nomenclature	Description
1, 2	NC	Not Connected
3	RECV DATA IN+	Receiver positive input from the ISBus (+)
4, 5	NC	Not Connected
6	RECV DATA IN–	Receiver negative input from the ISBus (–)
7, 8	NC	Not Connected

Table 5-4. ISBB TB2 Auxiliary Interlock Power Terminal Board

Pin No.	Nomenclature	Description
1	AUX INTERLOCK 24VDC	24 V dc from an auxiliary or external power source
2	AUX INTERLOCK 24VDC RTN	24 V dc return from an the auxiliary or external power source

Table 5-5. ISBB JP1 Interlock Bypass Jumper

Position	Description
1-2:	Default position which means the module must have the external interlock closed to energize the relay(s)
2-3:	Placing a jumper between these pins will short out the interlock. Power will still have to be applied to the board either via P1-7,8 or P5-1,2 to energize the relay(s)