GEI-100462A

GE Industrial Systems

Exciter Power Supply Module IS200EPSMG_A

EX2100

These instructions do not purport to cover all details or variations in equipment, nor to provide for every possible contingency to be met during installation, operation, and maintenance. The information is supplied for informational purposes only, and GE makes no warranty as to the accuracy of the information included herein. Changes, modifications and/or improvements to equipment and specifications are made periodically and these changes may or may not be reflected herein. It is understood that GE may make changes, modifications, or improvements to the equipment referenced herein or to the document itself at any time. This document is intended for trained personnel familiar with the GE products referenced herein.

GE may have patents or pending patent applications covering subject matter in this document. The furnishing of this document does not provide any license whatsoever to any of these patents. All license inquiries should be directed to the address below. If further information is desired, or if particular problems arise that are not covered sufficiently for the purchaser's purpose, the matter should be referred to:

GE Industrial Systems
Post Sales Service
1501 Roanoke Blvd.
Salem, VA 24153-6492 USA
Phone: + 1 888 GE4 SERV (888 434 7378, United States)
+ 1 540 378 3280 (International)
Fax: + 1 540 387 8606 (All)
("+" indicates the international access code required when calling from outside the USA)

This document contains proprietary information of General Electric Company, USA and is furnished to its customer solely to assist that customer in the installation, testing, operation, and/or maintenance of the equipment described. This document shall not be reproduced in whole or in part nor shall its contents be disclosed to any third party without the written approval of GE Industrial Systems.

GE PROVIDES THE FOLLOWING DOCUMENT AND THE INFORMATION INCLUDED THEREIN AS IS AND WITHOUT WARRANTY OF ANY KIND, EXPRESS OR IMPLIED, INCLUDING BUT NOT LIMITED TO ANY IMPLIED STATUTORY WARRANTY OF MERCHANTABILITY OR FITNESS FOR PARTICULAR PURPOSE.

Mr. Lucian
Sales manager

Joyoung International Trading Co., Ltd
Whatsapp/Wechat: +86 18106906650
Email: Lily@htechplc.com
Mobile: +86 18106906650
Website: www.xm-dcs.com
Address: Room 1503, Building B, Diamond Coast,
No. 96 Lujiang Road, Siming District, Xiamen Fujian

Wechat

Contents

Section	Page
Functional Description	2
EX2100 Excitation Control System Application	4
EX2100 Regulator Control Application	4
Application Data	6
Fuses and Testpoints	8
Connectors and EPSD Mounting	9
Renewal/Warranty Replacement	10
Handling Precautions	10
EPSMG1 Replacement (Offline)	10
EPSMG1 Replacement (Redundant, Online)	11
EPSMG2 Replacement (Regulator Control, Offline)	12
How to Order a Board	13
Warranty Terms	14

Safety Symbol Legend

Warning

Indicates a procedure, practice, condition, or statement that, if not strictly observed, could result in personal injury or death.

Caution

Indicates a procedure or condition that, if not strictly observed, could result in damage to or destruction of equipment.

Note Indicates an essential or important procedure or statement.

Functional Description

The IS200EPSMG_A Exciter Power Supply Module (EPSM) is used in the EX2100™ Excitation Control System and the EX2100 Regulator Control. EPSM Group 1 modules (EPSMG1) are used in the excitation control system and EPSM Group 2 modules (EPSMG2) are used in the regulator control. EPSMG2 includes an IS200EPSDG_A Exciter Regulator Power Supply Daughter board (EPSD) mounted to it.

The EPSM is comprised of 2 major sections, a buck-regulator and a push-pull inverter. The buck-regulator converts the input voltage to a 50 V dc intermediate voltage. This intermediate voltage is then applied to a push-pull inverter to create the required multiple output voltages. The transformer used in the push-pull inverter provides high-voltage isolation between the input voltage source and the output supplied to the control system.

The following diagram shows EPSM functionality:

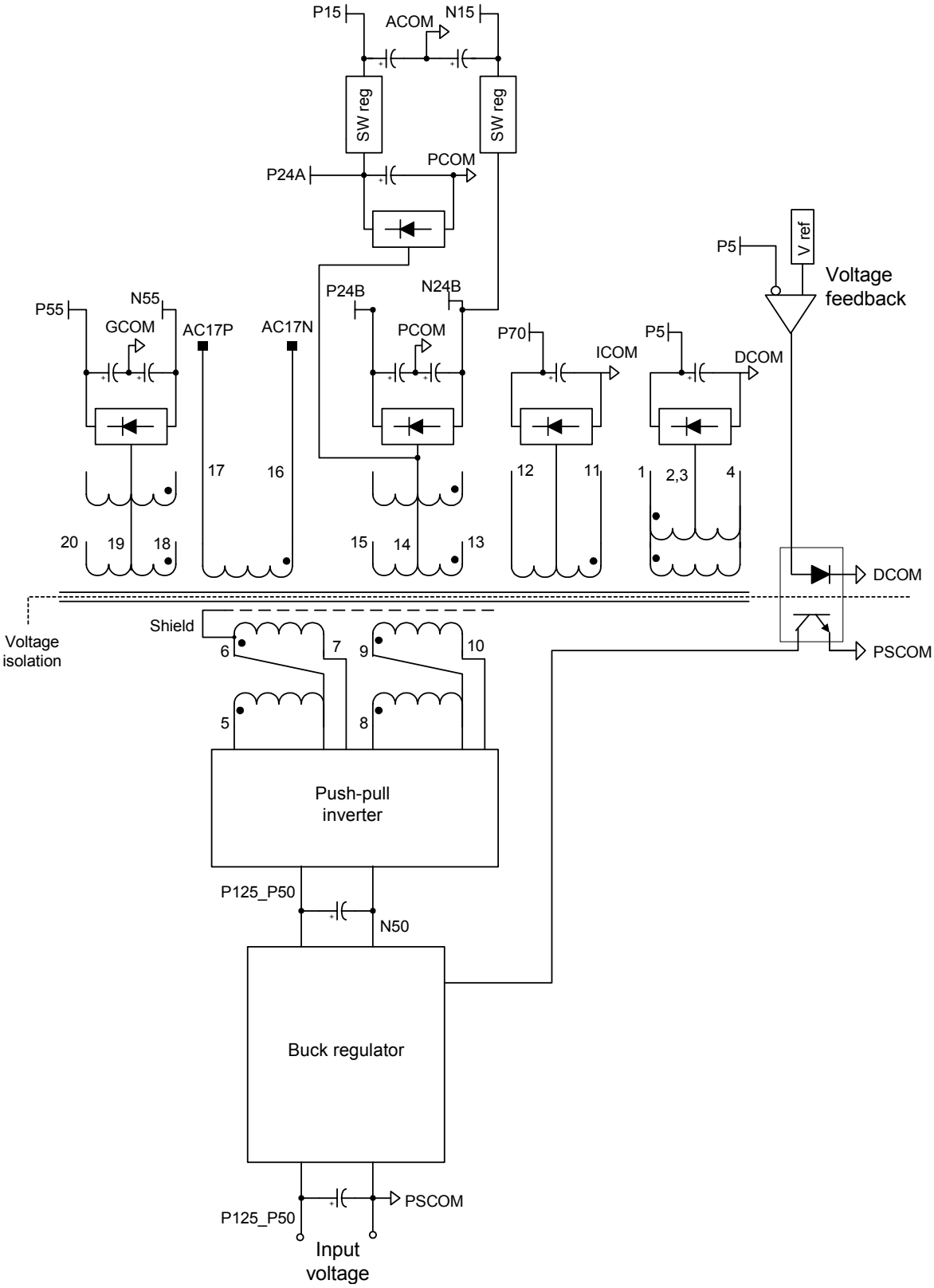

EPSM Functionality Block Diagram

EX2100 Excitation Control System Application

EPSMG1 converts 125 V dc from the power distribution module (PDM) into the voltages required for the EX2100 excitation control. There are three independent EPSMG1s that supply power to each of the controllers M1, M2, and C. They are mounted in the IS200EPBPG_A Exciter Power Backplane (EPBP) located below the IS200EBKPG_A Exciter Backplane (EBKP) in the control cabinet. Connectors P1 and P2 carry power from the EPSMG1 to EPBP for cables to EBKP and other boards.

The EPSMG1 supplies +5 V dc, ±15 V dc, and +24 V dc to the control assembly backplane. Power is also supplied to external modules as follows:

- ±24 V dc to power the fans, de-excitation module, crowbar module, the ground detector module, and the field voltage/current module
- Isolated +70 V dc for contact wetting to the terminal boards

The diagram below illustrates EPSMG1 application in excitation control systems:

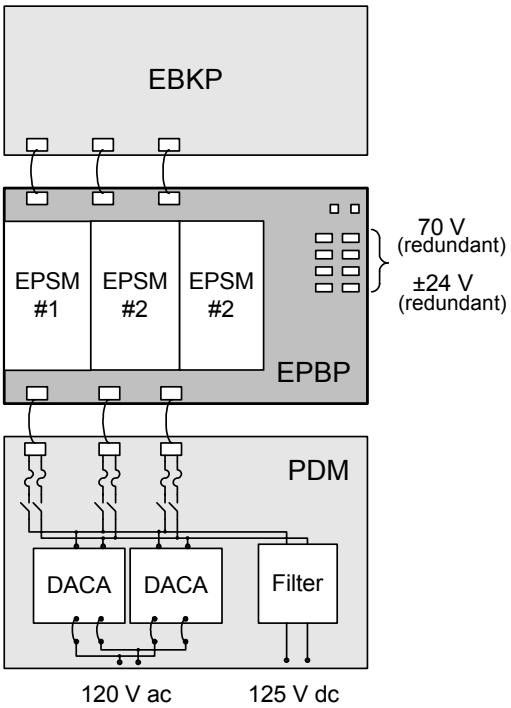

EPSMG1 Excitation Control Applications

EX2100 Regulator Control Application

EPSMG2 converts the dc link bus voltage into the voltages required for the EX2100 regulator control. In simplex systems, one EPSMG2 is mounted in the IS200ERBPH_A Exciter Regulator Backplane (ERBP). In redundant systems, one EPSMG2 is mounted in ERBP (M1) and a second EPSMG2 is mounted in the IS200ERRBH_A Exciter Regulator Redundant Backplane (ERRB, M2/C).

The EPSD that is mounted on EPSMG2 modifies the power input path to allow EPSMG2 to accept higher voltages by increasing the creep and clearance. It also provides a fuse between the regulator power source (dc link) and the buck-regulator.

The diagram below shows the input power path for regulator control applications:

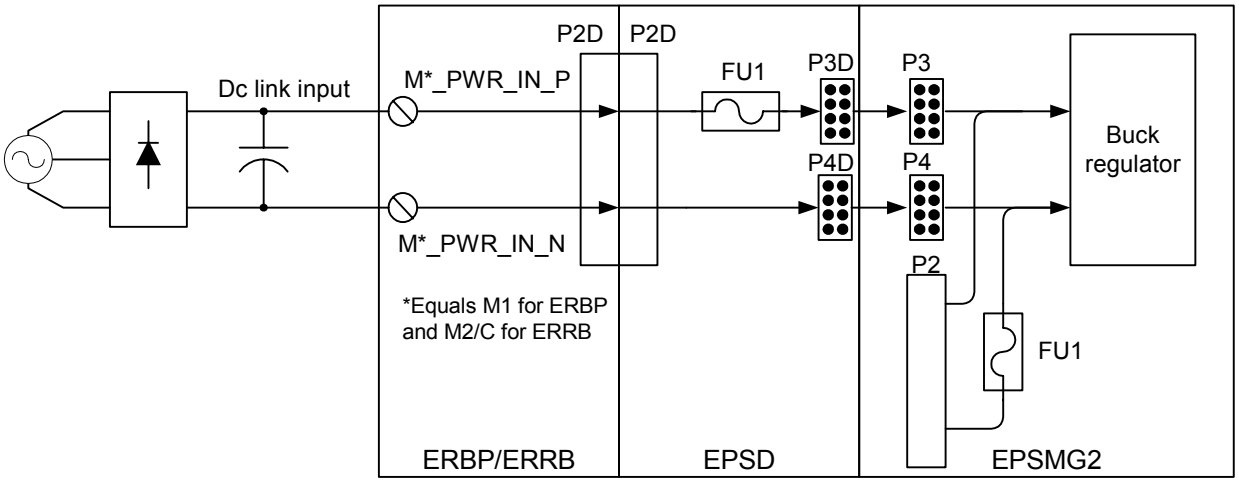

EPSMG2 Input Power Diagram

The EPSMG2 supplies +5 V dc, ±15 V dc, and +24 V dc to the ERBP and ERRB. Power is also supplied to external modules as follows:

- ±24 V dc (P24B/N24B) to power fans, relays, and the dc feedback board
- Isolated +70 V dc (P70) for contact-wetting on the terminal board, dynamic discharge board, and redundant relay board
- Isolated 20 V ac (AC17) to power the IGBT gate and dynamic discharge board
- ±55 V dc (P55/N55) to the ground detector circuits on the options card

The diagram below illustrates EPSMG2 application in regulator control systems:

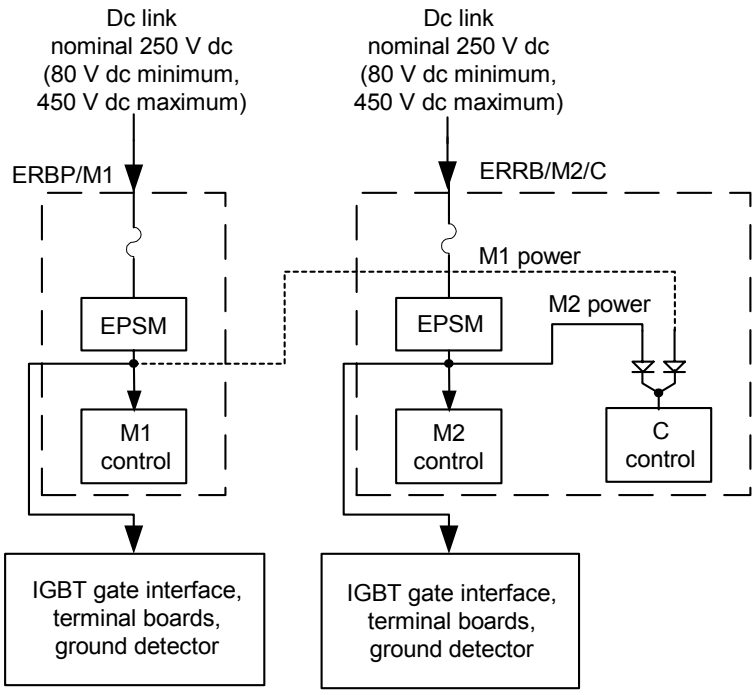

EPSMG2 Regulator Control Applications

Application Data

The EPSM includes fuses, testpoints, LED indicators, and two connectors for mounting the EPSD auxiliary board. EPSMG1 used in excitation control systems does not have the EPSD mounted. EPSMG2 used in regulator control systems has the EPSD mounted and connected. There are no adjustable jumpers on the board.

The EPSM faceplate has seven green LED indicators that illuminate when the label voltage is present on the individual outputs.

Ten individual voltages for the EX2100 excitation control system and regulator control are distributed by EPSM. Voltage parameters are as follows:

Output Voltages and Current Loads

Voltage	Minimum Voltage	Mean Voltage	Maximum Voltage	Maximum Load	Current Limit
P5	4.95 V dc	5.1 V dc	5.25 V dc	8.0 A	10 A fuse
P15	14.55 V dc	15.0 V dc	15.45 V dc	1.0 A	1.5 A
N15	-15.45 V dc	-15.0 V dc	-14.55 V dc	1.0 A	1.5 A
P24A	22.5 V dc	25.0 V dc	27.5 V dc	1.5 A	4.0 A fuse
P24B	22.5 V dc	25.0 V dc	27.5 V dc	2.0 A	4.0 A fuse
N24B	-27.5 V dc	-25.0 V dc	-22.5 V dc	2.0 A	4.0 A fuse
AC17*	18.0 V ac (rms)	20.0 V ac (rms)	22.0 V ac (rms)	0.75 A	None
P55**	52.5 V dc	55.0 V dc	57.5 V dc	0.2 A	0.75 A fuse
N55**	-52.5 V dc	-55.0 V dc	-57.5 V dc	0.2 A	0.75 A fuse
P70	63.0 V dc	70.0 V dc	77.0 V dc	0.2 A	0.75 A fuse

* 25 kHz square-wave output supplied to the dynamic discharge board in regulator control applications only.

**Required for the ground detector on the options card in regulator control applications only.

The following layout diagram shows EPSM component locations:

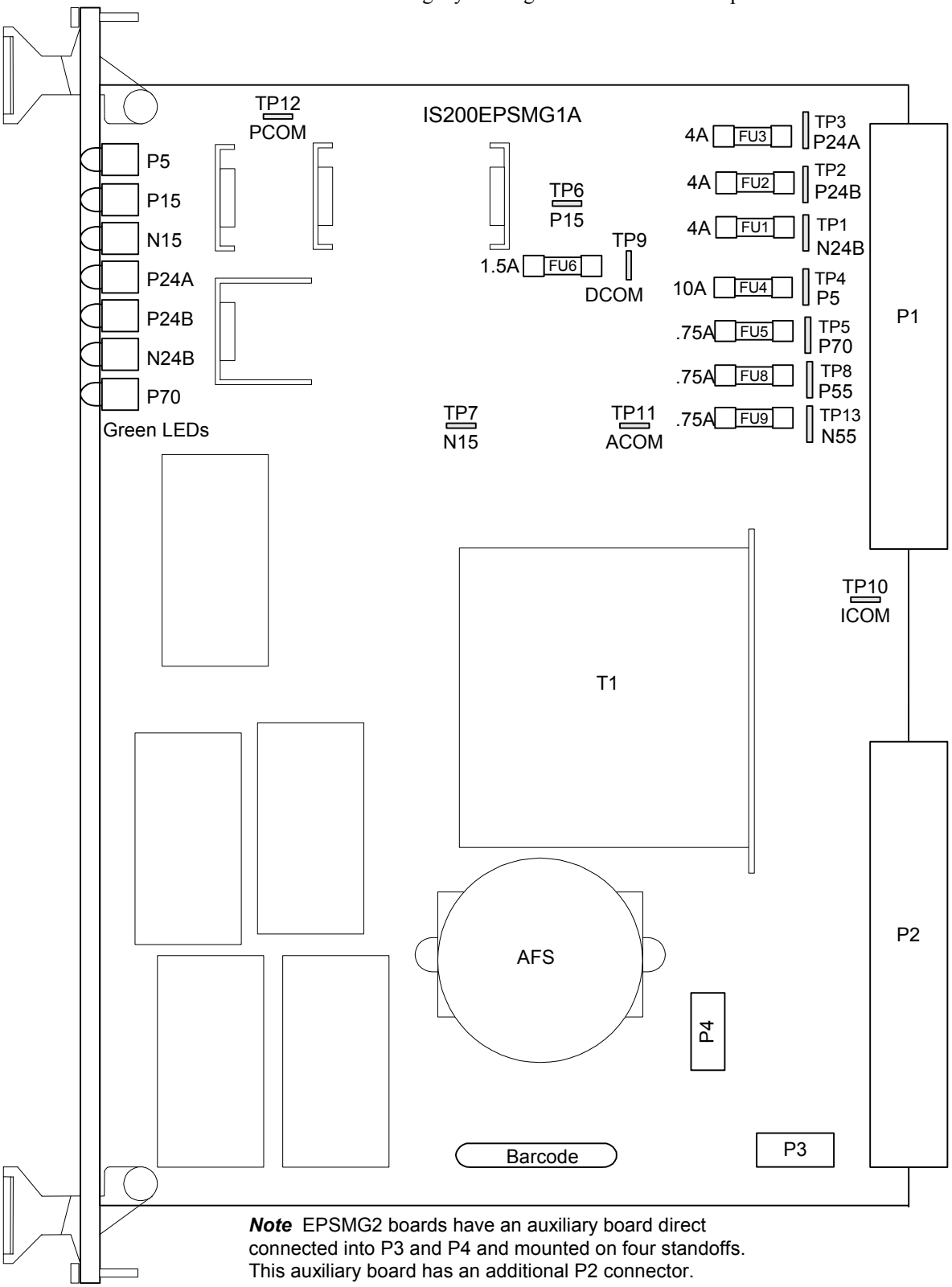

Note EPSMG2 boards have an auxiliary board direct connected into P3 and P4 and mounted on four standoffs. This auxiliary board has an additional P2 connector.

EPSMG1 Component Layout

Fuses and Testpoints

On EPSMG2, there is an additional 600 V, 5 A fuse (FU1) on EPSD (between the dc link input and the buck-regulator).

There are eight fuses on the voltage outputs of the EPSMG1. There are 13 testpoints on EPSMG1 to check nine of the voltage outputs, and PCOM, DCOM, ACOM, and ICOM. See tables below for fuse and testpoint descriptions.

EPSMG1 Fuses

Fuse	Nomenclature	Description
FU1	N24B	4 A fuse supplying the negative 24 V dc output B
FU2	P24B	4 A fuse supplying the positive 24 V dc output B
FU3	P24A	4 A fuse supplying the positive 24 V dc output A
FU4	P5	10 A fuse supplying the positive 5 V dc output
FU5	P70	0.75 A fuse supplying the positive 70 V dc output
FU6	N15	1.5 A fuse supplying the negative 15 V dc output
FU8	P55	0.75 A fuse supplying the positive 55 V dc output used for regulator applications only
FU9	N55	0.75 A fuse supplying the negative 55 V dc output used for regulator applications only

EPSMG1 Testpoints

No.	Nomenclature	Description
TP1	N24B	Negative 24 V dc voltage output B
TP2	P24B	Positive 24 V dc voltage output B
TP3	P24A	Positive 24 V dc voltage output A
TP4	P5	Positive 5 V dc voltage output
TP5	P70	Positive 70 V dc voltage output
TP6	P15	Positive 15 V dc voltage output
TP7	N15	Negative 15 V dc voltage output
TP8	P55	Positive 55 V dc voltage output used for regulator applications only
TP9	DCOM	Voltage on digital common (P5 return)
TP10	ICOM	Voltage on isolated common (P70 return)
TP11	ACOM	Voltage on analog common (P15, N15 return)
TP12	PCOM	Voltage on power common (P24A, P24B, N24B, P55, N55 return)
TP13	N55	Negative 55 V dc voltage output used for regulator applications only

Connectors and EPSD Mounting

The P3 and P4 connectors on EPSMG1 are for connection of the EPSD that is mounted to it to become an EPSMG2. The following diagram shows the EPSD connection and mounting and the table after it describes the connector pin signals:

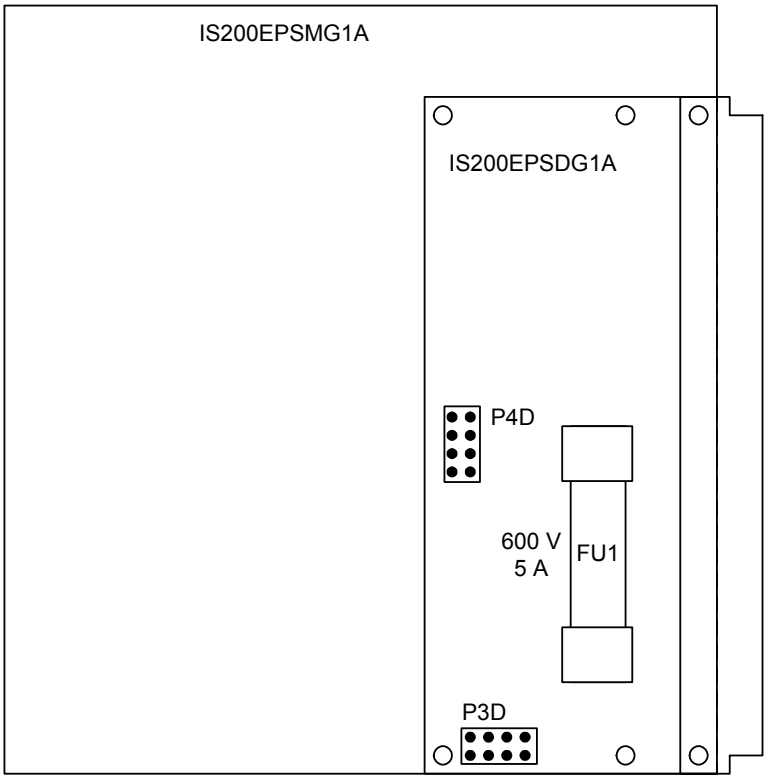

IS200EPSMG2 (has auxiliary board mounted)

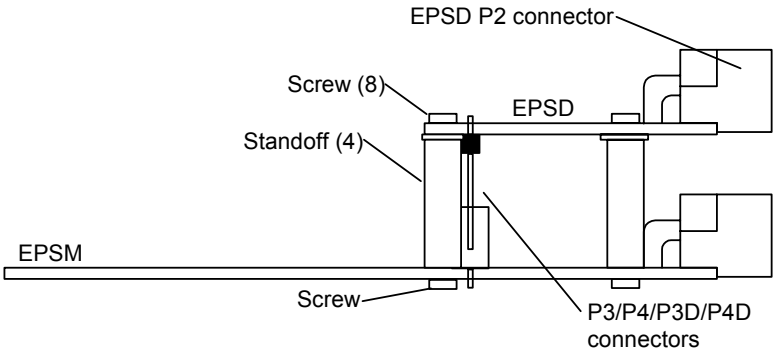

EPSD Connections and Mounting

ESPM/ESPD Connector Signal Descriptions

Connector	Pin #	Signal	Description
P3/P3D	1 – 8	M*_PWR_IN_P	Current limited dc link positive input to EPSM
P4/P4D	1 – 8	M*_PWR_IN_N	Dc link negative input to EPSM PSCOM

*Equals M1 for ERBP and M2/C for ERRB

Renewal/Warranty Replacement

Handling Precautions

Caution

To prevent component damage caused by static electricity, treat all boards with static sensitive handling techniques. Wear a wrist grounding strap when handling boards or components, but only after boards or components have been removed from potentially energized equipment and are at a normally grounded workstation.

Printed wiring boards may contain static-sensitive components. Therefore, GE ships all replacement boards in antistatic bags. Use the following guidelines when handling boards:

- Store boards in antistatic bags or boxes.
- Use a grounding strap when handling boards or board components (per previous *Caution* criteria).

EPSMG1 Replacement (Offline)

Warning

To prevent electric shock, turn off power to the exciter, then test to verify that no power exists in the module before touching it or any connected circuits. There are special procedures for online repair, see section, *EPSMG1 Replacement (Redundant, Online).*

Caution

To prevent equipment damage, do not remove, insert, or adjust board connections while power is applied to the equipment.

➢ **To replace the EPSMG1 module offline**

Refer to EX2100 Installation and Startup Guide, GEH-6631 for complete de-energizing procedures and follow all local practices of lock-out/tag-out.

1. Make sure that the exciter has been de-energized.
2. Open the control cabinet door and check that the power indicators on the EPDM and EPSMG1 power supplies are off.
3. Carefully remove the EPSMG1 from EPBP as follows:
   a. Loosen the screws at the top and bottom of the faceplate, near the ejector tabs. (The screws are captive in the faceplate and should not be removed.)
   b. Unseat the module by raising the ejector tabs.
   c. Using both hands, gently pull it from its slot in EPBP.

Caution

Because EPSMG1 is designed for specific backplane slots, inserting EPSMG1 into the wrong slot can damage the electronics.

4. Slide the replacement EPSMG1 into the correct slot in the correct section of EPBP (M1 section for simplex exciters, or M1, M2 or C section for redundant exciters).
5. Begin seating the board by firmly pressing the top and bottom of the faceplate at the same time with your thumbs.
6. Finish seating the module in the slot by starting and then alternately tightening the screws at the top and bottom of the faceplate. Tighten the screws evenly to ensure that the module is seated squarely.
7. Apply power to the M1 section of the EPBP from the EPDM and check that the EPSMG1 power indicator LEDs come on. Check that the green power LEDs on the M1 controller boards come on also.

EPSMG1 Replacement (Redundant, Online)

For a **redundant** excitation control system, it is possible to replace a failed EPSMG1 while the exciter is running. You have the option to leave the failed EPSMG1 in place, and let the exciter run on the remaining EPSMG1s. However, in the unlikely event of a second failure in another control section, the exciter will shut down. If you decide to change the EPSMG1, follow the procedure below.

➢ To replace the EPSMG1 in a redundant control online

1. Open the control cabinet door and confirm the failed EPSMG1 from the indicators on the front of the three EPSMG1 modules. Some or all of the failed module's green indicators will be off, and indicators on the associated controller will be off.

Care should be taken when replacing the module since the other controllers, power supplies, and terminal boards are still energized and active.

2. Check the LEDs on the IS200ESELH_A Exciter Selector board (ESEL) mounted in EBKP to confirm that control is transferred to the other master.
3. De-energize the section of EPBP containing the EPSMG1 to be replaced. This section is de-energized by switching off the appropriate output of the exciter power distribution module (EPDM).
4. Check that the LED indicator on the appropriate section of the EPDM is off, and the indicators on the EPSMG1 and corresponding controller are all off.
5. Carefully remove the EPSMG1 from EPBP as follows:
   a. Loosen the screws at the top and bottom of the faceplate, near the ejector tabs. (The screws are captive in the faceplate and should not be removed.)
   b. Unseat the module by raising the ejector tabs.
   c. Using both hands, gently pull it from its slot in EPBP.

Because EPSMG1 is designed for specific backplane slots, inserting the EPSMG1 into the wrong slot can damage the electronics.

6. Slide the replacement EPSMG1 into the correct slot in EPBP.
7. Begin seating the board by firmly pressing the top and bottom of the faceplate at the same time with your thumbs.
8. Finish seating the module in the slot by starting and then alternately tightening the screws at the top and bottom of the faceplate. Tighten the screws evenly to ensure that the module is seated squarely.

The replacement EPSMG1 voltages can be tested at the J602 connector. Refer to GEI-100463.

9. Apply power to the appropriate section of the EPBP from the EPDM, and check that the EPSMG1 power indicator LEDs come on. Check that the green power LEDs on the corresponding controller boards come on.

EPSMG2 Replacement (Regulator Control, Offline)

The EPSMG2 is mounted in the ERBP and ERRB and replaced as a single board (with auxiliary board mounted). It is recommended that the customer stock a spare EPSMG2. The EPSMG2 cannot be replaced online in either the simplex or redundant EX2100 Regulator Control.

Warning

To prevent electric shock, turn off power to the regulator control, then test to verify that no power exists in the board before touching it or any connected circuits.

Caution

To prevent equipment damage, do not remove, insert, or adjust board connections while power is applied to the equipment.

➢ To replace the EPSMG2

Refer to the Installation and Startup Guide, GEH-6674, for complete de-energizing procedures and follow all local practices of lock-out/tag-out.

1. Make sure that the regulator control in which the EPSMG2 resides has been de-energized.
2. Open the exciter control cabinet door, and test any electrical circuits **before touching them** to ensure that power is off.

Warning

Avoid dropping any mounting hardware into the equipment as this could cause equipment damage or personal injury when power is reapplied.

3. Carefully remove the EPSMG2 from the backplane as follows:
   a. Loosen the screws at the top and bottom of the faceplate, near the ejector tabs. (The screws are captive in the faceplate and should not be removed.)
   b. Unseat the EPSMG2 by raising the ejector tabs.
   c. Using both hands, gently pull it out from the backplane.

Caution

Because EPSMG2 designed for specific backplane slots, inserting the EPSMG2 into the wrong slot can damage the electronics.

4. Slide the replacement EPSMG2 into the correct slot in the backplane.
5. Begin seating the board by firmly pressing the top and bottom of the faceplate at the same time with your thumbs.
6. Finish seating the board in the slot by starting and then tightening the screws at the top and bottom of the faceplate. Tighten the screws evenly to ensure that the module is seated squarely.
7. Close the exciter control cabinet door.

How to Order a Board

When ordering a replacement board for a GE exciter, you need to know:

- How to accurately identify the part
- If the part is under warranty
- How to place the order

This information helps ensure that GE can process the order accurately and as soon as possible.

Board Identification

A printed wiring board is identified by an alphanumeric **part (catalog) number** located near its edge. *Board Part Number Conventions* explains the structure of the part number.

The board's functional acronym, shown below, is normally based on the **board description**, or name. For example, the EPSM board is described as the *Exciter Power Supply Module*.

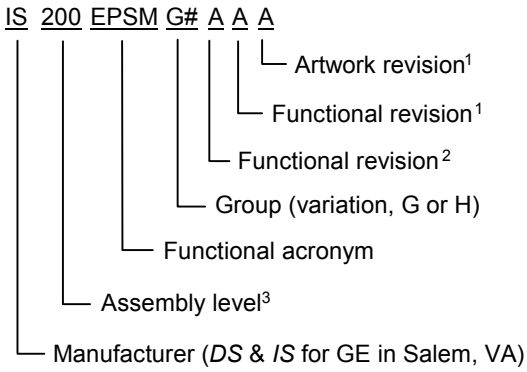

[1]Backward compatible
[2]Not backward compatible
[3]*200* indicates a base-level board; *215* indicates a higher-level assembly or added components (such as PROM)

Board Part Number Conventions

Warranty Terms

The GE *Terms and Conditions* brochure details product warranty information, including **warranty period** and **parts and service coverage**. The brochure is included with customer documentation. It may be obtained separately from the nearest GE Sales Office or authorized GE Sales Representative.

Placing the Order

"+" indicates the international access code required when calling from outside of the USA.

Parts still under **warranty** may be obtained directly from the factory:

GE Industrial Systems
Post Sales Service
1501 Roanoke Blvd.
Salem, VA 24153-6492 USA

Phone: + 1 888 GE4 SERV (888 434 7378, United States)
+ 1 540 378 3280 (International)

Fax: + 1 540 387 8606 (All)

Renewals (spares or those not under warranty) should be ordered by contacting the nearest GE Sales or Service Office. Be sure to include:

- Complete part number and description
- Exciter serial number
- Exciter Material List (ML) number

Note All digits are important when ordering or replacing any board. The factory may substitute later versions of replacement boards based on availability and design enhancements. However, GE Industrial Systems ensures backward compatibility of replacement boards.

GE Industrial Systems

+1 540 387 7000
www.GEindustrial.com

General Electric Company
1501 Roanoke Blvd.
Salem, VA 24153-6492 USA