GE Industrial Systems

Exciter De-Excitation Control Board IS200EDEXG_A

These instructions do not purport to cover all details or variations in equipment, nor to provide for every possible contingency to be met during installation, operation, and maintenance. If further information is desired or if particular problems arise that are not covered sufficiently for the purchaser's purpose, the matter should be referred to GE Industrial Systems.

This document contains proprietary information of General Electric Company, USA and is furnished to its customer solely to assist that customer in the installation, testing, operation, and/or maintenance of the equipment described. This document shall not be reproduced in whole or in part, nor shall its contents be disclosed to any third party without the written approval of GE Industrial Systems.

Safety Symbol Legend

Warning — **Indicates a procedure, practice, condition, or statement that, if not strictly observed, could result in personal injury or death.**

Caution — **Indicates a procedure or condition that, if not strictly observed, could result in damage to or destruction of equipment.**

Note Indicates an essential or important procedure or statement.

Section **Page**

Functional Description 2
- Voltage Hold Up Circuit 2
- Conduction Sensors 3
- SCR Firing Voltage 4
- Multiple EDEX Boards 4

Application Data 5
Board Replacement 9
- Handling Precautions 9
- Replacement Procedures 9

Renewal/Warranty Information 11
- Board Identification 11
- Warranty Terms 11
- Placing the Order 12

Mr. Lucian
Sales manager

Joyoung International Trading Co., Ltd
Whatsapp/Wechat: +86 18106906650
Email: Lily@htechplc.com
Mobile: +86 18106906650
Website: www.xm-dcs.com
Address: Room 1503, Building B, Diamond Coast,
No. 96 Lujiang Road, Siming District, Xiamen Fujian

Wechat

Functional Description

The IS200EDEX Exciter De-Excitation control board (EDEX) is the main board in the de-excitation module. This module removes stored energy from the generator field when an emergency shutdown occurs and the field breaker or contactors open. EDEX provides SCR firing, conduction sense feedback, and voltage retention to ensure operation in the event of a power failure.

EMIO initiates de-excitation on the EXTB board. The EXTB board opens the 41dc contactor (MDA/MDB) or breaker, and then transfers de-excitation signals from the auxiliary contacts to SCR firing circuits on the EDEX. The control scheme is shown in the following diagram.

There are two types of EDEX board. Group 1 is designed for SCR de-excitation, and Group 2 is designed for diode de-excitation.

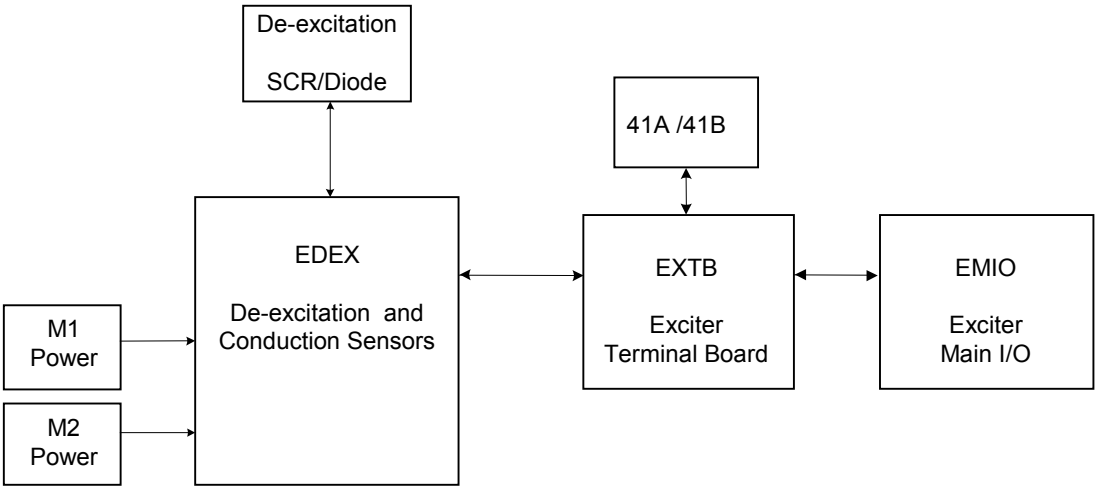

De-Excitation Control Scheme

A board level block diagram of EDEX is shown below. With redundant control, two firing commands come in through the EXTB and activate the firing circuit. Upon firing, the circuit produces a high frequency square wave which is connected to the SCR gate and causes conduction. If this circuit fails or is delayed, a self-firing circuit fires the gate. This circuit consists of a break-over diode network controlled by the SCR anode voltage, and connected to the SCR gate.

Voltage Hold Up Circuit

EDEX retains voltage on the positive 24 V dc and negative 24 V dc so it can fire the SCR in the event of a total power failure. Voltage for *wetting* the external de-excitation contacts is also provided by the voltage hold up circuitry. This ensures the firing command is available for de-excitation after a power failure.

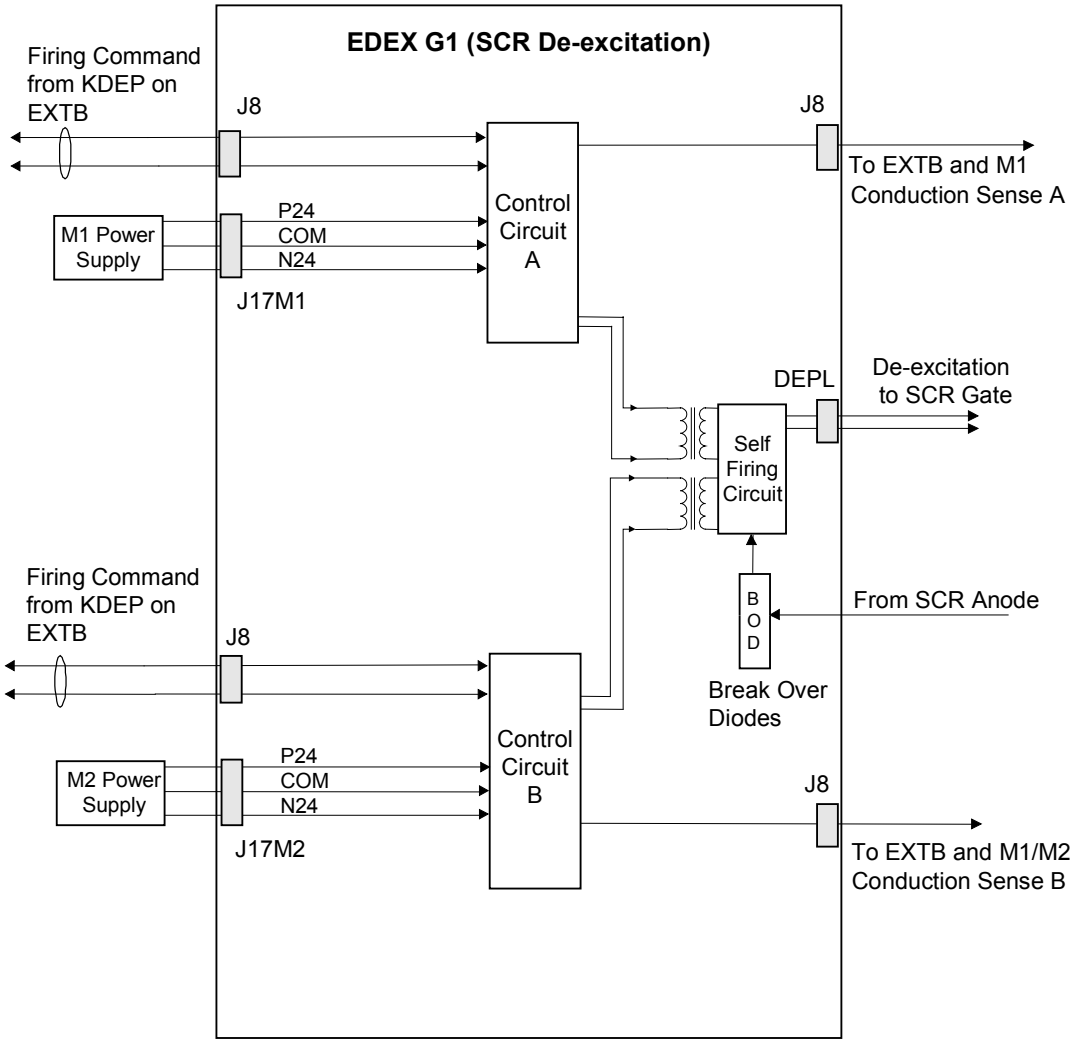

Board Level Block Diagram of EDEX

Conduction Sensors

EDEX detects current in the field circuit using Hall Effect sensors. A mechanical ring couples magnetic flux to the sensors located at the top edge of the board. Both sensor circuits 1 and 2 have separate circuits detecting bi-polar current flow. The M1 and M2 current sense signals are sent to EXTB and then to control.

For diode de-excitation applications, the mechanical ring is set to detect unidirectional current flow.

Two red LEDs indicate the status of both current sense circuits. The indicators light whenever current flow is detected.

SCR Firing Voltage

The SCR anode firing voltage is selectable for the voltage and type of SCR used. Both the Break Over Diodes (BODs) and current limiting resistors are set with wire jumpers. The firing commands M1, M2, and the Break Over Diodes, are wired together and connected to the gate of the SCR through the DEPL connector.

Caution

If a break-over diode's break-over voltage is exceeded and the BOD is not connected to the gate of the SCR, the EDEX will be destroyed. Before attempting to fire the SCR by exceeding the break-over voltage of the BOD, make sure that the firing control circuit will fire the SCR.

Multiple EDEX Boards

For large field current applications, it is necessary to use multiple de-excitation SCRs. Each SCR is controlled by an EDEX board connected in a Master-Follower configuration. The figure below shows the connections. The Follower boards receive +24 V dc, –24 V dc, and Common from the Master board over the EPL cables, and no connections to J1 and J2 should be made. The EDEX boards are configured with jumpers as either Master or Follower.

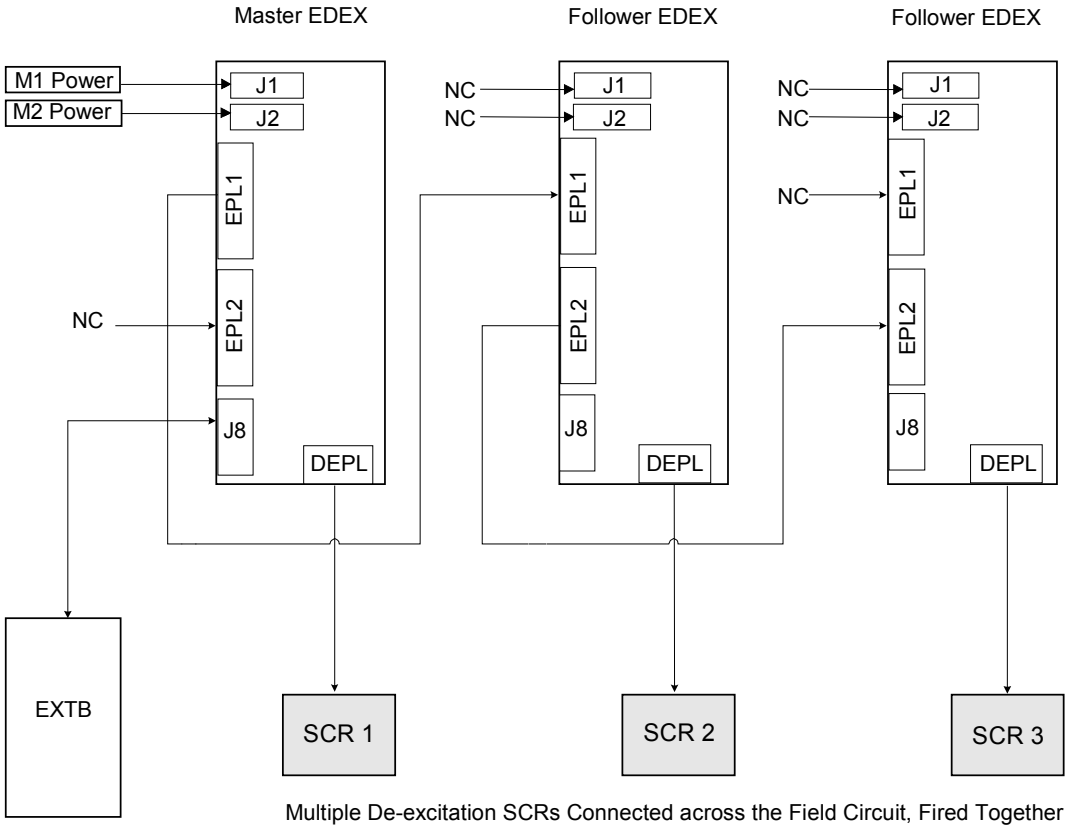

Master and Follower EDEX Board Configurations

Application Data

Layout of the EDEX board is shown in the figure below. Power comes in through J1 and J2, and the cable from EXTB carrying the de-excitation signal connects to J8.

Stab connectors E1B through E12 are for wire jumpers to select the break over diodes and current limiting resistors for the voltage and size of SCR. Stab connector E1A is wire jumpered to the SCR anode.

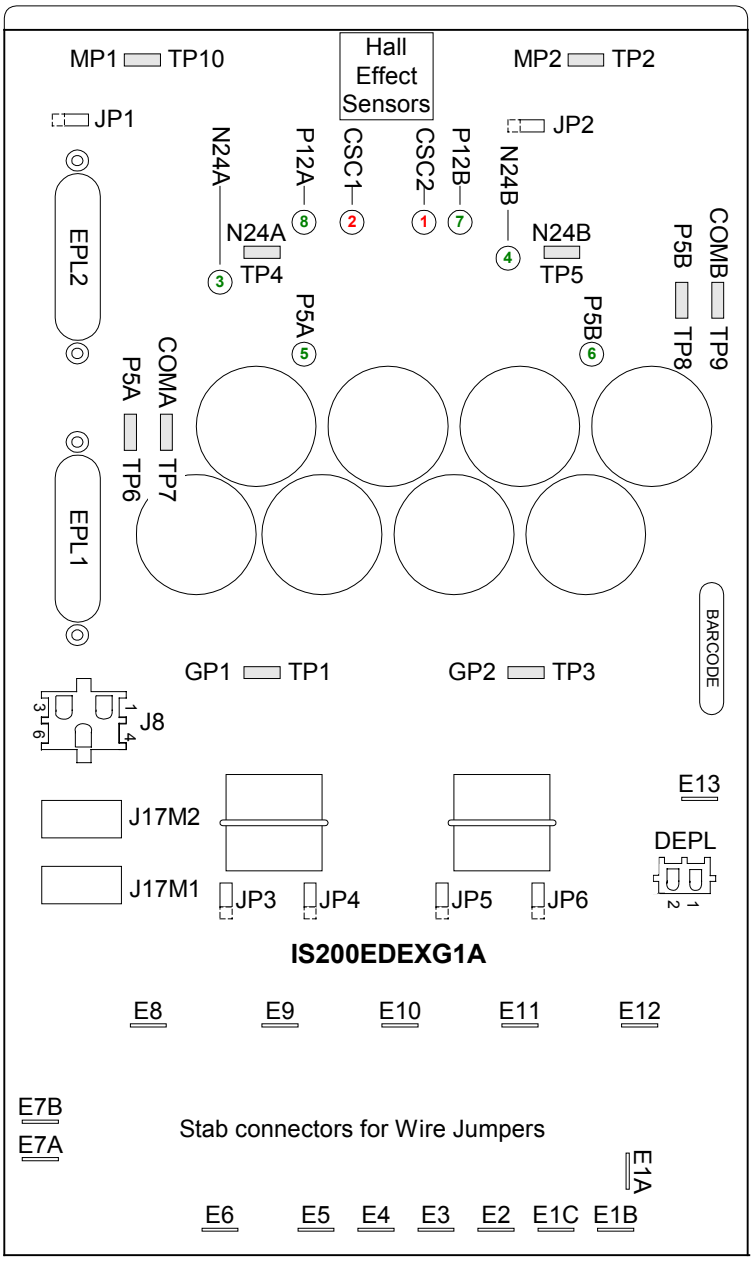

EDEX Board Layout

Anode voltage settings for firing the SCR are shown in the table below.

Anode Voltage Settings

	53 mm SCR Cell Wire Jumper Connections		77 mm SCR Cell Wire Jumper Connections	
Anode Firing Voltage	**Break-Over Diodes**	**Current Limiting Resistors**	**Break-Over Diodes**	**Current Limiting Resistors**
700 V ± 50 V	E7A – E11	E1B – E5	E7A – E11	E1B – E6
1400 V ± 100 V	E7A – E10	E1B – E3	E7A – E10	E1B – E5
2100 V ± 150 V	E7A – E9	E1B – E1C	E7A – E9	E1B – E4
2800 V ±200 V	NA	NA	E7A – E8	E1B – E3
3500 V ± 250 V	NA	NA	E7A – E7B	E1B – E2

J17M1 and J17M2 power wiring assignments on EDEX are shown in the following two tables. Four-pin locking connectors are used.

J17M1 Power Wiring Assignments on EDEX

J17M1 Pin Number	Signal Description
1	+ 24 V dc
2	24 V return
3	24 V return
4	- 24 V dc

J17M2 Power Wiring Assignments on EDEX

J17M2 Pin Number	Signal Description
1	+ 24 V dc
2	24 V return
3	24 V return
4	- 24 V dc

The connection to EXTB is through six-pin locking connector, J8. The pin descriptions are shown in the table below.

J8 Pin Descriptions

J8 Pin Number	Signal Description
1	Firing Command for M2
2	De-excitation status A
3	Ret_48VM2
4	Firing Command for M1
5	De-excitation status B
6	Ret_48VM1

The firing command signal connection to the SCR is through the two-pin locking connector, DEPL. The pin descriptions are shown in the table below.

DEPL Pin Descriptions

DEPL Pin No.	Signal Description
1	Fire Signal Return
2	Firing Signal

The cable from the Master EDEX board to the first Follower EDEX uses a 25-pin D connector labeled EPL1. The pin descriptions are shown in the table below.

EPL1 Pin Descriptions

EPL1 Pin No.	Signal Description
1	Master Pulse 1 from Control Circuit 1
2	Common from M1
3	Common from M1
4	Positive 24 V dc from M1 supply
5	Positive 24 V dc from M1 supply
6	Negative 24 V dc from M1 supply
7	Negative 24 V dc from M1 supply
8	Common from M1
9	Common from M1
10	Positive 24 V dc supplied from EXTB for Conduction Sense Circuit 1
11-15	No Connection
16	Master Pulse 2 from Control Circuit 2
17	Common from M2
18	Common from M2
19	Positive 24 V dc from M2 supply
20	Positive 24 V dc from M2 supply
21	Negative 24 V dc from M2 supply
22	Negative 24 V dc from M2 supply
23	Common from M2
24	Common from M2
25	Positive 24 V dc supplied from EXTB for Conduction Sense Circuit 2

The cable from the Follower EDEX board to the next Follower EDEX uses a 25-pin D connector labeled EPL2. This is a Daisy Chain connection. The pin descriptions are shown in the table below.

EPL2 Pin Descriptions

EPL2 Pin No.	Signal Description
1	Master Pulse 1 from Control Circuit 1
2	Common from M1
3	Common from M1
4	Positive 24 V dc from M1 supply
5	Positive 24 V dc from M1 supply
6	Negative 24 V dc from M1 supply
7	Negative 24 V dc from M1 supply
8	Common from M1
9	Common from M1
10	Positive 24 V dc supplied from EXTB for Conduction Sense Circuit 1
11-15	No Connection
16	Master Pulse 2 from Control Circuit 2
17	Common from M2
18	Common from M2
19	Positive 24 V dc from M2 supply
20	Positive 24 V dc from M2 supply
21	Negative 24 V dc from M2 supply
22	Negative 24 V dc from M2 supply
23	Common from M2
24	Common from M2
25	Positive 24 V dc supplied from EXTB for Conduction Sense Circuit 2

The EDEX is configured as a Master or Follower board using the jumpers JP1 and JP2. These settings are shown in the table below. JP3 – 6 are always connected

Master And Follower Jumper Settings

Jumper	Board Type	Jumper Position	Configuration
JP1	Master	M	Select as Master
JP2	Master	M	Select as Master
JP1	Follower 1	S	Select as Follower
JP2	Follower 1	S	Select as Follower
JP1	Follower 2	S	Select as Follower
JP2	Follower 2	S	Select as Follower

Board Replacement

Handling Precautions

Caution

To prevent component damage caused by static electricity, treat all boards with static sensitive handling techniques. Wear a wrist-grounding strap when handling boards or components, but only after boards or components have been removed from potentially energized equipment and are at a normally grounded workstation.

Printed wiring boards may contain static-sensitive components. Therefore, GE ships all replacement boards in antistatic bags.

Use the following guidelines when handling boards:

- Store boards in antistatic bags or boxes.
- Use a grounding strap when handling boards or board components (per previous *Caution* criteria).

Replacement Procedures

Warning

To prevent electric shock, turn off power to the exciter, then test to verify that no power exists in the board before touching it or any connected circuits.

Caution

To prevent equipment damage, do not remove, insert, or adjust board connections while power is applied to the equipment.

➢ **To replace the board**

Refer to the EX2100 Installation and Startup Guide, GEH-6631 for complete de-energizing procedures and follow all local practices of lock-out/tag-out.

1. Make sure that the panel in which the board resides has been de-energized.
2. Open the auxiliary cabinet door and test any electrical circuits **before touching them** to ensure that power is off.
3. Carefully disconnect all cables from the EDEX board as follows:
   a. Verify all cables are labeled with the correct connector name (as marked on the board) to simplify reconnection.
   b. Disconnect all the cables from the board, and the stab on wire jumper from connector E1A, leaving the other wire jumpers in place.

Warning

Avoid dropping any mounting hardware into the equipment as this could cause equipment damage or personal injury when power is reapplied.

4. Remove the conduction ring (flux concentrator) located over the Hall Effect sensors.

5. Open the PEM Snap Top fasteners that hold the EDEX board to the intermediate mounting panel, and remove the board.

Jumpers JP3–6 are always connected.

6. Place the wire jumpers on the replacement EDEX board in the same position as on the old board, and check that the jumpers JP1 – 6 are in the same position.

7. Orient the replacement EDEX board in the same position on the mounting panel as the one removed, and close the Snap Top fasteners.

8. Replace the conduction ring.

9. Reconnect all cables to the EDEX board as labeled, and the wire jumper to E1A, and ensure that cables are properly seated at both ends.

10. Close the auxiliary cabinet door.

Renewal/Warranty Information

When ordering a replacement board for a GE exciter, you need to know:

- How to accurately identify the part
- If the part is under warranty
- How to place the order

This information helps ensure that GE can process the order accurately and as soon as possible.

Board Identification

A printed wiring board is identified by an alphanumeric **part (catalog) number** located near its edge. *Board Part Number Conventions* explains the structure of the part number.

The board's functional acronym, shown below, is normally based on the **board description**, or name. For example, the EDEX board is described as *the Exciter De-Excitation Board*.

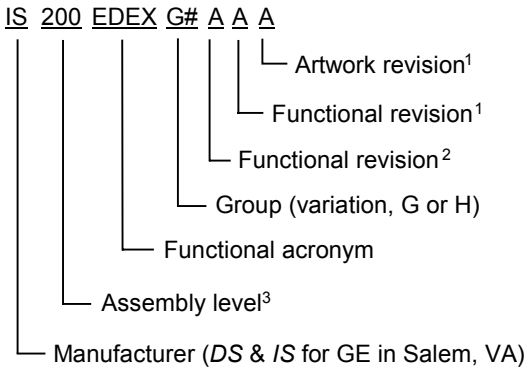

[1]Backward compatible
[2]Not backward compatible
[3]*200* indicates a base-level board; *215* indicates a higher-level assembly or added components (such as PROM)

Board Part Number Conventions

Warranty Terms

The GE *Terms and Conditions* brochure details product warranty information, including **warranty period** and **parts and service coverage**. The brochure is included with customer documentation. It may be obtained separately from the nearest GE Sales Office or authorized GE Sales Representative.

Placing the Order

("+" indicates the international access code required when calling from outside of the USA.)

Parts still under **warranty** may be obtained directly from the factory:

GE Industrial Systems
Product Service Engineering
1501 Roanoke Blvd.
Salem, VA 24153-6492 USA

Phone: + 1 800 533 5885 (United States)
+ 1 540 378 3280 (International)

Fax: + 1 540 387 8606 (All)

Renewals (spares or those not under warranty) should be ordered by contacting the nearest GE Sales or Service Office. Be sure to include:

- Complete part number and description
- Exciter serial number
- Exciter Material List (ML) number

Note All digits are important when ordering or replacing any board. The factory may substitute later versions of replacement boards based on availability and design enhancements. However, GE Industrial Systems ensures backward compatibility of replacement boards.

GE Industrial Systems

Issue date: 2000-10-31
© 2000 by General Electric Company, USA.
All rights reserved.

General Electric Company
1501 Roanoke Blvd.
Salem, VA 24153-6492 USA