DTCI Simplex Contact Input with Group Isolation

Functional Description

The Simplex Contact Input with Group Isolation (DTCI) terminal board is a compact terminal board designed for DIN-rail mounting. The DTCI board has 24 contact inputs with a nominal excitation of 24 V dc, and connects to the VCCC (or VCRC) processor board with a single cable. Two DTCI boards can be connected to the VCCC or VCRC for a total of 48 contact inputs. The terminal boards can be stacked vertically on a DIN-rail to conserve cabinet space. Only a simplex version of this board is available.

Note DTCI does not work with the PDIA I/O Pack.

Installation

Note There is no shield terminal strip with this design.

Mr. Lucian
Sales manager
Joyoung International Trading Co., Ltd
Whatsapp/Wechat: +86 18106906650
Email: Lily@htechplc.com
Mobile: +86 18106906650
Website: www.xm-dcs.com
Address: Room 1503, Building B, Diamond Coast,
No. 96 Lujiang Road, Siming District, Xiamen Fujian
Wechat

Mount the plastic holder on the DIN-rail and slide the DTCI board into place. Connect the wires for the contact inputs directly to the terminal block. The Euro-Block type terminal block has 60 terminals and is permanently mounted on the terminal board. Typically #18 AWG wires are used. Two screws, 55 and 56, are provided for the SCOM (ground) connection, which should be as short a distance as possible. Six screws are provided for the 24 V dc excitation power.

Note SCOM must be connected to ground.

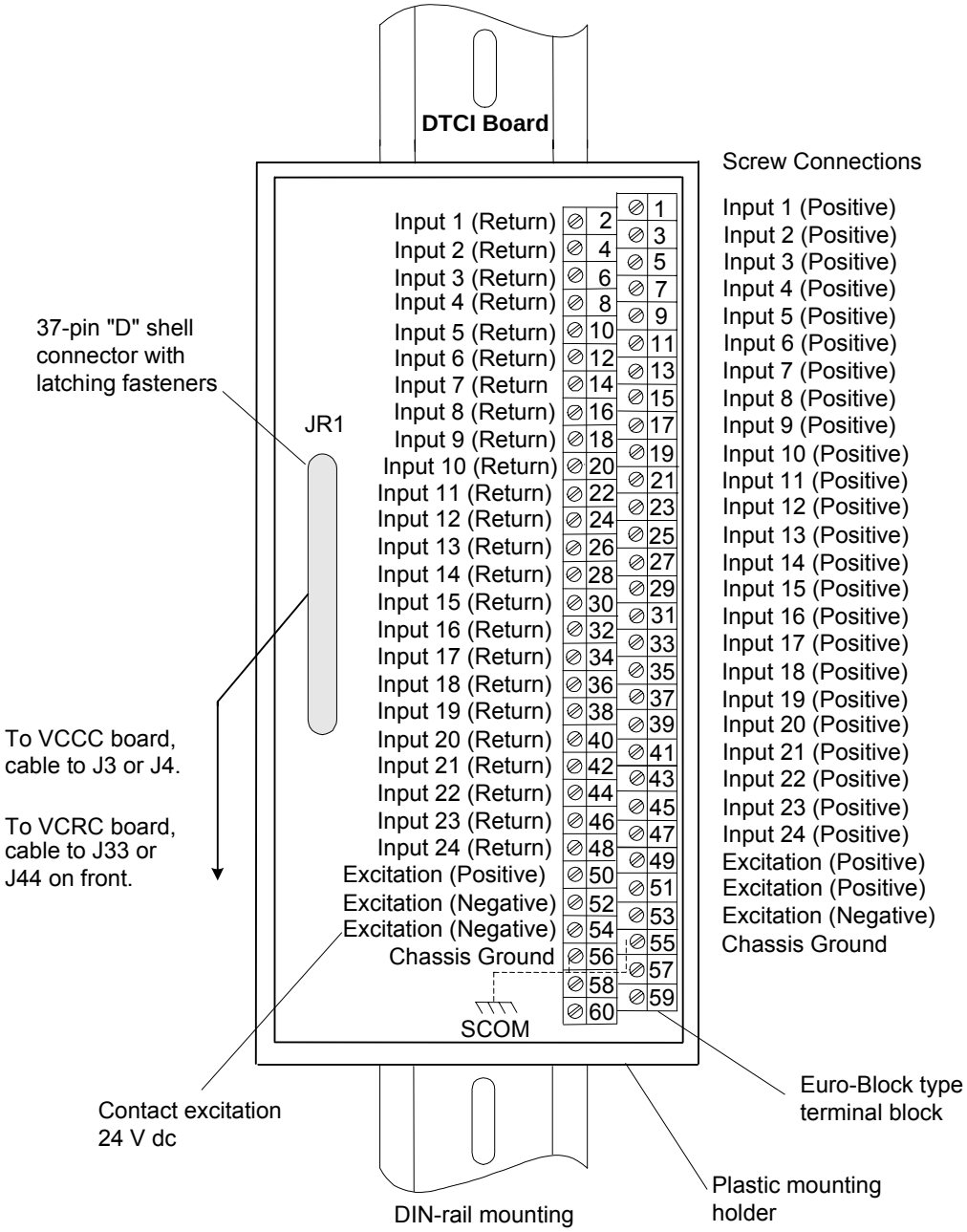

Operation

DTCI has the same functionality and on-board signal conditioning as TBCI, except they are scaled for 24 V dc.The input excitation ranges from 18 to 32 V dc, and the threshold voltage is 50% of the excitation voltage. The ac voltage rejection is 12 V rms. Contact inputs take 2.5 mA nominal current on the first 21 circuits, and 10 mA on circuits 22 through 24.

Filters reduce high frequency noise and suppress surge on each input near the point of signal entry. The discrete input voltage signals are cabled to the VCCC board (or VCRC), which passes them through optical isolators and transfers the signals over the VME backplane to the VCMI. The VCMI then sends them to the controller.

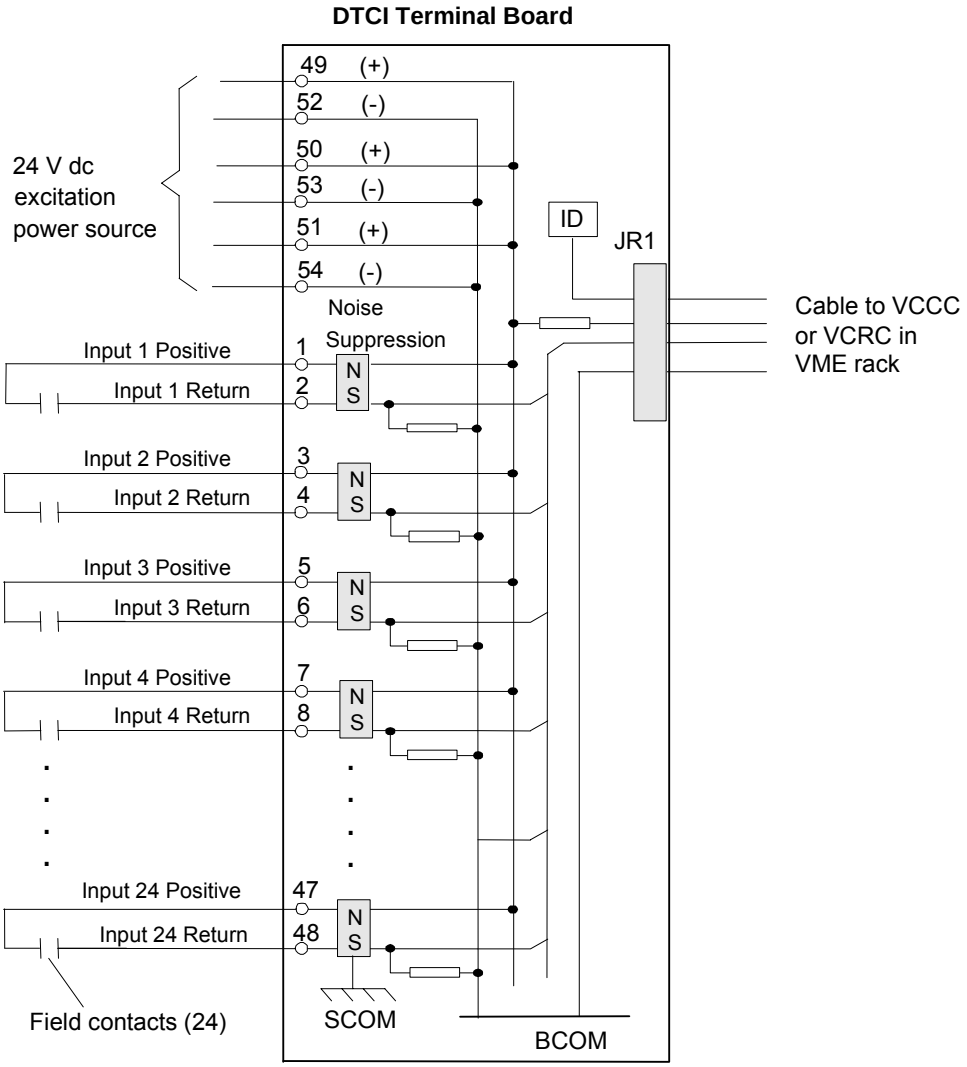

DTCI Contact Input Circuits

Specifications

Item	Specification
Number of channels	24 dry contact voltage input channels
Excitation voltage	Nominal 24 V dc, floating, ranging from 18 to 32 V dc
Input current	First 21 circuits each draw 2.5 mA (50 kΩ)
	Last three circuits each draw 10 mA (12.5 kΩ)
Input filter	Hardware filter, 4 ms
Temperature rating	0 to 60ºC (32 to 140 ºF)
Fault detection in I/O board	Loss of contact input excitation voltage
	Non-responding contact input in test mode
	Unplugged cable
Physical	
Size, with support plate	8.6 cm wide x 16.2 cm high (3.4 in x 6.37 in)
Temperature	0 to 60ºC (32 to 140 ºF)

Diagnostics

Diagnostic tests to components on the terminal boards are as follows:

- The excitation voltage is monitored. If the excitation drops to below 40% of the nominal voltage, a diagnostic alarm is set and latched by the I/O pack/board.
- As a test, all inputs associated with this terminal board are forced to the open contact (fail safe) state. Any input that fails the diagnostic test is forced to the failsafe state and a fault is created.
- If the input from this board does not match the TMR voted value from all three boards, a fault is created.
- Each terminal board connector has its own ID device that is interrogated by the I/O pack/board. The connector ID is coded into a read-only chip containing the board serial number, board type, revision number, and the JR1/JS1/JT1 connector location. When the chip is read by the controller and a mismatch is encountered, a hardware incompatibility fault is created.

Configuration

There are no jumpers or hardware settings on the board.